WIW24
Cermet Trimmer Potentiometer

Electrical Characteristics

Parameter	Specification
Nominal resistance	100 Ω to 1 MΩ
Resistance tolerance	±10%, ±20%
Terminal resistance	≤1%R or 10 Ω, whichever is greater
Dielectric withstand	640 V
Contact resistance variation	≤±5%R or 5 Ω, whichever is greater
Limiting wiper current	100 mA
Mechanical travel	≥25 turns



Physical Characteristics

Parameter	Specification
Starting torque	≤35 mN·m
Total mechanical travel	(40±5) turns
Marking	Trademark, model, nominal resistance, resistance tolerance

Circuit Diagram

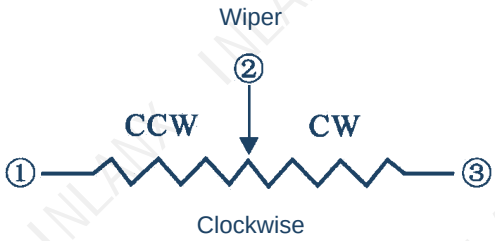

Nominal Resistance • Ω

Ω	Ω	Ω
100	5k	200k
200	10k	500k
500	20k	1M
1k	50k	
2k	100k	

Environmental Characteristics

Parameter	Specification
Rated power	1 W @ 70℃; 0 W @ 100℃
Temperature range	-55℃ to +100℃
Temperature coefficient	±500 × 10^-6/K

Applicable Standards

Quality mark	Detail specification	Generic specification
J	Q/RU 126-1999	GJB 15298-1994

WIW24

Cermet Trimmer Potentiometer

Main Inspection Items

Item	Test Conditions and Requirements
Shock	490 m/s², 11 ms; ΔR≤±(5%R+0.1 Ω).
Temperature change	-55℃ / 100℃; ΔR≤±(5%R+0.1 Ω); Δ(Uab/Uac)≤±5%.
High-frequency vibration	10 Hz to 500 Hz, 0.75 mm or 98 m/s², 6 h; ΔR≤±(5%R+0.1 Ω); Δ(Uab/Uac)≤±7.5%.
Climatic sequence	GB/T 15298-1994, 4.38; no visible damage or continuous electrical discontinuity; ΔR≤±(10%R+0.5 Ω); insulation resistance ≥100 MΩ.
Damp heat, steady state	GB/T 15298-1994, 4.39; no visible damage, flashover or breakdown; ΔR≤±(10%R+0.5 Ω); insulation resistance ≥100 MΩ.
Mechanical endurance	GB/T 15298-1994, 4.40; 200 revolutions at 2 to 5 revolutions/min; no mechanical damage; rotational noise ≤5%R or 5 Ω, whichever is greater; ΔR≤±(10%R+0.5 Ω).
Electrical endurance	GB/T 15298-1994, 4.43; ΔR≤±(10%R+0.5 Ω); CRV≤5%R or 5 Ω, whichever is greater.

Outline Dimensions • mm

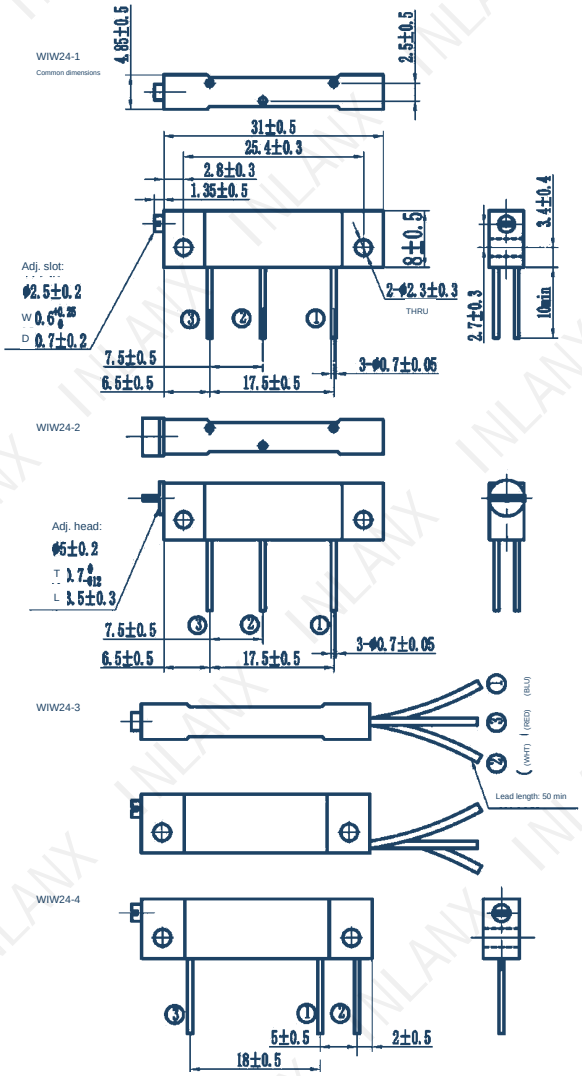

Ordering Information

WIW24 - 1 - 10K - K

Model / Terminal style 1 (styles 1 to 4: see drawing) /
Nominal resistance / Tolerance K (±10%)

WIW24-4

Cermet Trimmer Potentiometer

Electrical Characteristics

Parameter	Specification
Nominal resistance	100 Ω to 1 MΩ
Resistance tolerance	±10%
Insulation resistance	≥1 GΩ
Dielectric withstand	640 VAC
Effective electrical travel	≥25 turns
Terminal resistance	≤2%R or 2 Ω, whichever is greater
Contact resistance variation	CRV≤2%R



Physical Characteristics

Parameter	Specification
Starting torque	≤35 mN·m
Marking	Model, resistance, tolerance, quality grade, circuit diagram, trademark

Outline Dimensions • mm

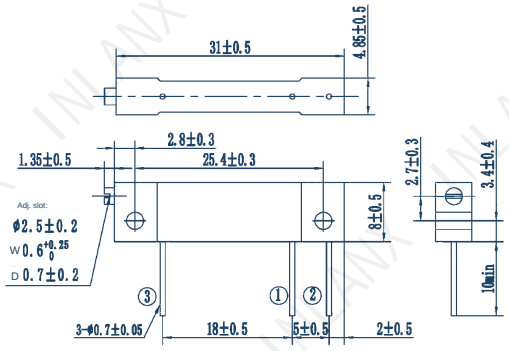

Circuit Diagram

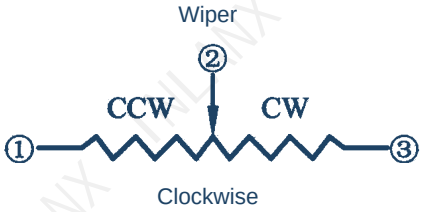

Nominal Resistance • Ω

Ω	Ω	Ω
100	5k	200k
200	10k	500k
500	20k	1M
1k	50k	
2k	100k	

Environmental Characteristics

Parameter	Specification
Rated power	1 W @ 70℃; 0 W @ 125℃
Temperature range	-55℃ to +125℃
Temperature coefficient	≤±250 × 10^-6/K

WIW24-4
Cermet Trimmer Potentiometer

Main Inspection Items

Item	Test Conditions and Requirements
Moisture resistance	GJB 360A-1996, Method 106; ΔR≤±10%R; insulation resistance ≥100 MΩ.
Shock	GJB 360A-1996, Method 213; 1000 m/s² or 100 g, 6 ms, terminal-peak sawtooth; ΔR≤±2%R; Δ(Uab/Uac)≤±2%.
High-frequency vibration	GJB 360A-1996, Method 204; 10 Hz to 2000 Hz, 150 m/s², 0.75 mm; ΔR≤±2%R; Δ(Uab/Uac)≤±2%.
High-temperature life	GJB 360A-1996, Method 108; 70℃, 1000 h; no mechanical damage; ΔR≤±10%R; Δ(Uab/Uac)≤±2%.
Low-temperature operation	-55℃, 1 h; rated continuous working voltage not exceeding the limiting element voltage for 45 min; ΔR≤±2%R; Δ(Uab/Uac)≤±2%.
High-temperature storage	125℃, 250 h; ΔR≤±12%R; insulation resistance ≥1 GΩ; Δ(Uab/Uac)≤±2%.
Rotational life	(2±0.5) min per revolution, 200 revolutions; no mechanical damage; ΔR≤±5%R.
Immersion	85℃ to 90℃, (60±5) s; no more than 3 air bubbles.
Thermal shock	-65℃ to +125℃, ≥15 min, 5 cycles; no electrical discontinuity or mechanical damage; ΔR≤±3%R; Δ(Uab/Uac)≤±2%.

Applicable Standards

Quality grade	Detail specification	Generic specification
Triangle J mark	Q/RU 20918.1-2003	GJB 918-1990

Dimensions in mm.

Ordering Information

WIW24 - 4 - 10K - K

Model / Terminal style (4: see drawing) / Nominal resistance / Tolerance (K: ±10%)