SSTR1000-24A

Overvoltage chopper resistor

Application

For main-transformer components in AC/DC transmission equipment, to discharge overvoltage in the intermediate DC circuit.

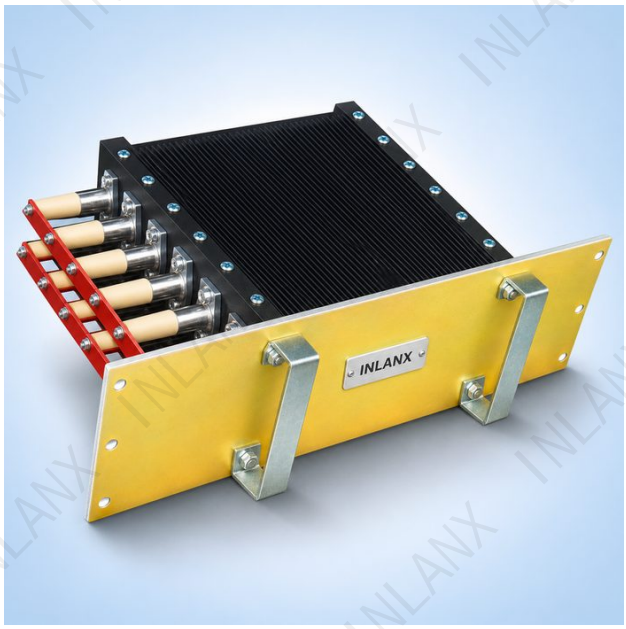

Product features

- Operating ambient: -55°C to +85°C
- Relative humidity: <95%
- Cooling: natural cooling
- Shock and vibration: sine wave, 5–100 Hz

Design

Multiple SSTR1000 resistors are combined with a heat sink to achieve good impulse withstand and heat dissipation.

Main parameters

Item	Parameter
Resistance	2.4 Ω ±5%
Impulse withstand*	1.44 MW·s
Insulation withstand	9000 V AC / 1 min
Maximum impact acceleration	Horizontal: 30 m/s² Transverse: 20 m/s² Vertical: 10 m/s²

* The source unit MW·s is retained.

Overall dimensions • mm

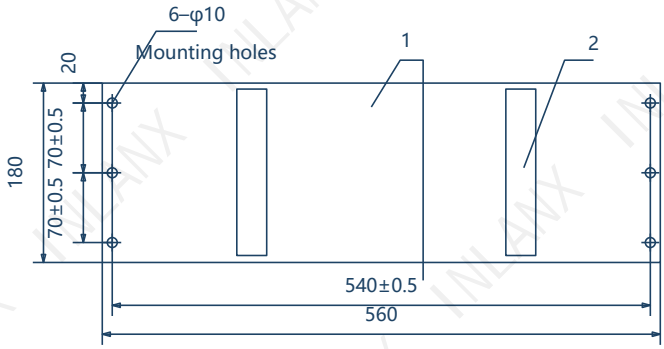

Construction views • mm

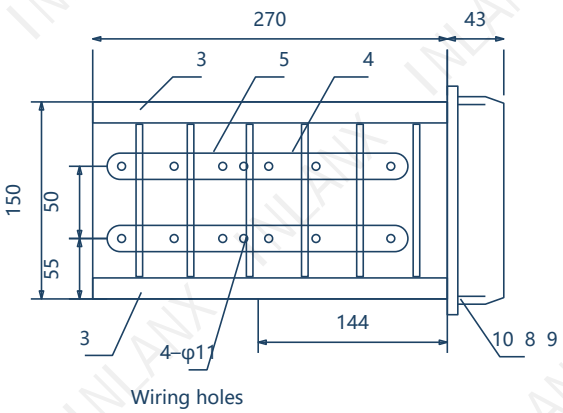

M8 bolt, spring washer, flat washer

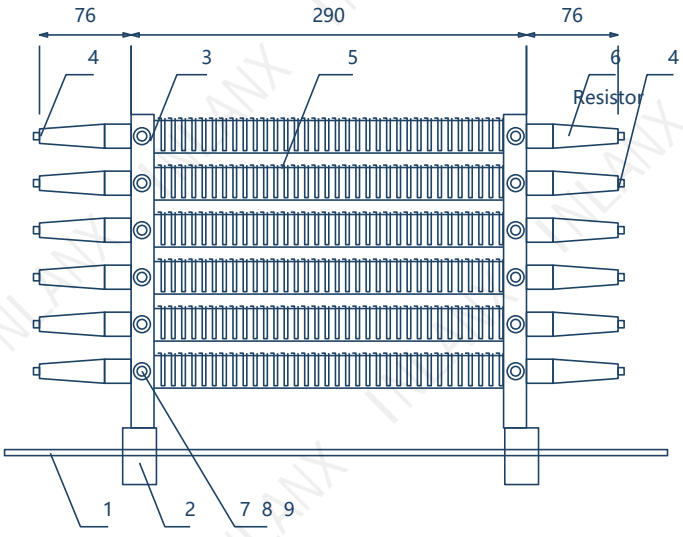

M8 socket-head bolt, spring washer, flat washer

SSTR-X

High-power metal-tube resistor assemblies

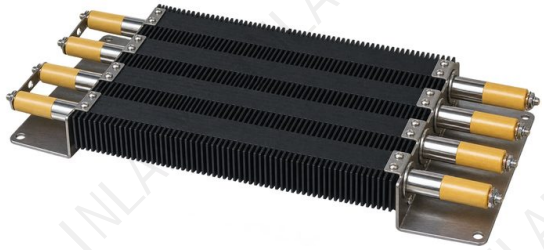

Figure 1

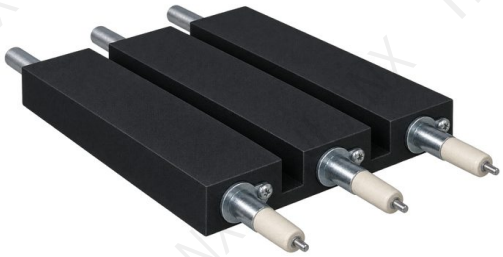

Figure 2



Figure 3



Figure 4



Figure 5

Application

When a single resistor cannot meet the application conditions of high-power electronic equipment, combined high-power resistor assemblies can be designed to meet customer requirements.

Product features

Multiple SSTR1000 resistors are combined and designed for water cooling, forced-air cooling or natural cooling, according to actual equipment use, to meet the required power and voltage-withstand characteristics.

Design cases

Case 1 | Electric locomotives

A 4000 W resistor assembly designed for forced-air cooling (Figure 1); insulation withstand: 5000 V; resistance values: 10 Ω, 40 Ω and 160 Ω.

Case 2 | Electric locomotives

3000 W resistors with an installation base, designed to use a natural-cooling heat-dissipation surface (Figure 2); insulation withstand: 5000 V; resistance values: 15 Ω and 120 Ω.

Case 3 | Electric locomotives

A 1.44 MW·s chopper resistor with a resistance of 2.4 Ω, designed for a natural-cooling space (Figure 3).

Case 4 | DC transmission

Designed for a water-cooled heat sink, rated at 6000 W or above; resistance values: 6.5 Ω, 40 Ω, 60 Ω and 240 Ω; insulation withstand: 5000 V (Figure 4).

Case 5 | Large ships

A 100 kW high-power braking resistor designed for natural cooling without fans; withstand voltage: 5000 V; resistance: 4 Ω (Figure 5).