RX20B/RXG20B Paint-Coated Fixed Wirewound Resistors

Product Introduction

• Features: optional dedicated accessories for easy installation. Painted surface; high-temperature resistant and flame-retardant.

• Applications: DC or low-frequency AC circuits in high-power electrical equipment.

• Non-inductive products are available by agreement; add “N” before the model.

• Products meeting RoHS and REACH requirements can be manufactured.

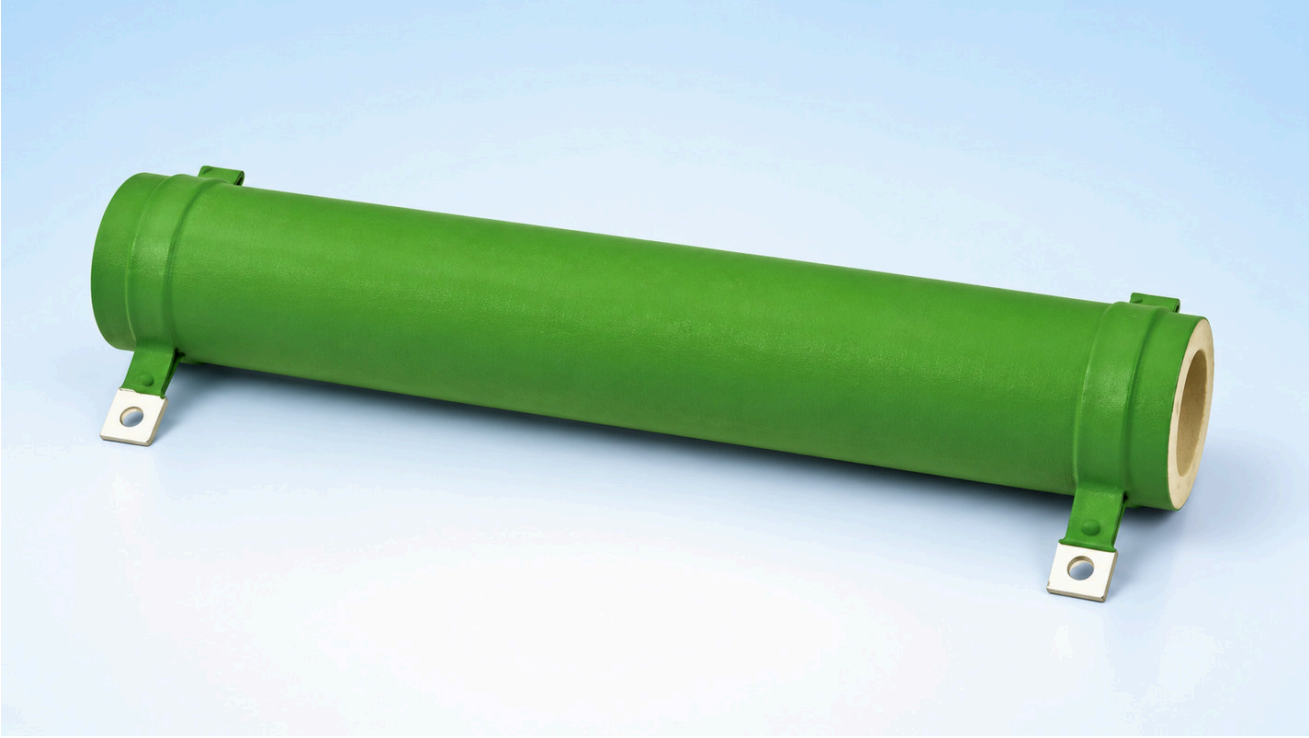

Outline Dimensions

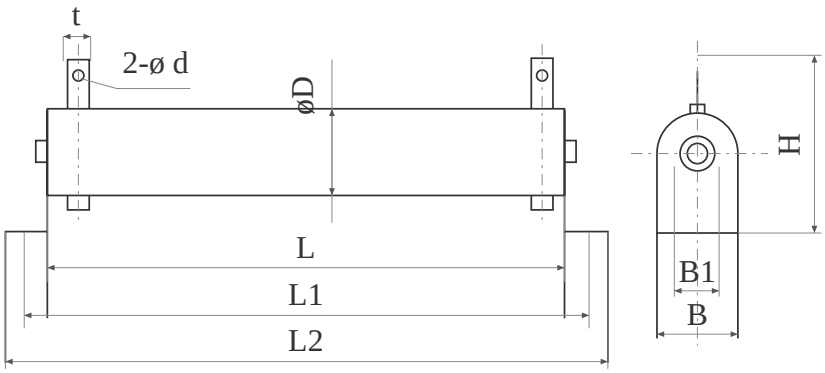

Ratings & Dimensions

Model	Rated power (W)	Resistance range (Ω)	Dimensions (mm)									Weight (g)
			L	L1	L2	D	H	t	d	B1	B	
RX20B-80W	80	15 ~ 2K	140±2	162±3	174±4	32±3	76±3	12±1	5.5	6.5	28	133
RX20B-100W	100	20 ~ 2.4K	170±2	192±3	204±4	32±3	76±3	12±1	5.5	6.5	28	160
RX20B-150W	150	24 ~ 3K	215±2	237±3	249±4	32±3	76±3	12±1	5.5	6.5	28	205
RXG20B-200W	200	33 ~ 3.6K	266±2	288±3	300±4	32±3	76±3	12±1	5.5	6.5	28	255
RXG20B-300W	300	39 ~ 4.3K	266±2	288±3	302±4	36±3	88±3	12±1	5.5	6.5	34	410
RXG20B-400W	400	51 ~ 6.8K	250±2	280±3	302±4	54±3	102±3	15±1	6.5	7	48	770
RXG20B-500W	500	62 ~ 10K	300±2	330±3	352±4	54±3	102±3	15±1	6.5	7	48	1040
RXG20B-1000W	1000	82 ~ 10K	300±3	332±4	362±4	72±3	128±3	16±1	6.5	9	68	1500
RXG20B-1500W	1500	130 ~ 10K	420±3	452±4	482±4	72±3	128±3	16±1	6.5	9	68	2000
RXG20B-2000W	2000	160 ~ 10K	520±3	552±4	582±4	72±3	128±3	16±1	6.5	9	68	2500
RXG20B-2500W	2500	200 ~ 10K	600±3	632±4	662±4	72±3	128±3	16±1	6.5	9	68	3000
RXG20B-3000W	3000	240 ~ 10K	700±3	732±4	762±4	72±3	128±3	16±1	6.5	9	68	3500

Main Test Items

Test item	Test conditions	Performance requirements	Test standard
Voltage withstand	Voltage: 1500Vdc, 1min, between terminals and mounting hardware	No breakdown or flashover	GB/T 5729-2003 Clause 4.7
Terminal strength	Tensile force: 20N, 10s	ΔR≤± (2%R+0.1Ω)	GB/T 2423.29-1999
Rapid temperature change	Temperature range: (-55 ~ +125)°C, 5 cycles	ΔR≤± (2%R+0.1Ω)	GB/T 2423.22-2002
Steady-state damp heat	Temperature: (40±2)°C; relative humidity: (93±3)%; 96h	ΔR≤± (5%R+0.1Ω)	GB/T 2423.03-1993
Endurance at room temperature	Ambient temperature: (15 ~ 35)°C; rated power; 1.5h on, 0.5h off; 96h	ΔR≤± (5%R+0.1Ω)	GB/T 5729-2003 Clause 4.25

Ordering Example

Model	Rated power	Nominal resistance	Resistance tolerance	Accessories	Quantity
RXG20B	200W	40Ω	±5%	With accessories	1000 pieces