WX50

Wirewound Potentiometer

Electrical Characteristics

Parameter	Specification
Nominal resistance	510 Ω (special resistance values available)
Resistance tolerance	±5%
Effective electrical travel	280°±5°
Independent linearity	≤±1%
Insulation resistance	≥1 GΩ (500 VDC)
Dielectric withstand	1000 VAC, 1 min



Physical Characteristics

Parameter	Specification
Starting torque	≤3 N·cm
Mechanical travel	300°±10°
Marking	Manufacturer logo, model, resistance, product number

Environmental Characteristics

Parameter	Specification
Temperature range	-55℃ to +125℃
Rated power	50 W @ 85℃; 0 W @ 125℃

Applicable Standards

Quality mark	Detail specification	Generic specification
QB	—	GB/T 15298-1994

Main Inspection Items

Item	Test Conditions and Requirements
Functional random vibration	GB/T 21563-2018, Category I, Class B; no discontinuity longer than 0.1 ms during vibration; partial resistance change ≤50 Ω.
Simulated long-life test	GB/T 21563-2018, Category I, Class B; no discontinuity longer than 0.1 ms during vibration; partial resistance change ≤50 Ω.
Shock	GB/T 21563-2018, Category I, Class B; no discontinuity longer than 0.1 ms during vibration; no mechanical damage after the test.
Mechanical endurance	74 VDC, 500000 revolutions; resistance change ≤10%.

Ordering Information

WX50 - 510R±5% - 280 - A

Model / Nominal resistance and tolerance /
Effective electrical travel 280° / Mounting A (bushing mounting)

Outline Dimensions • mm

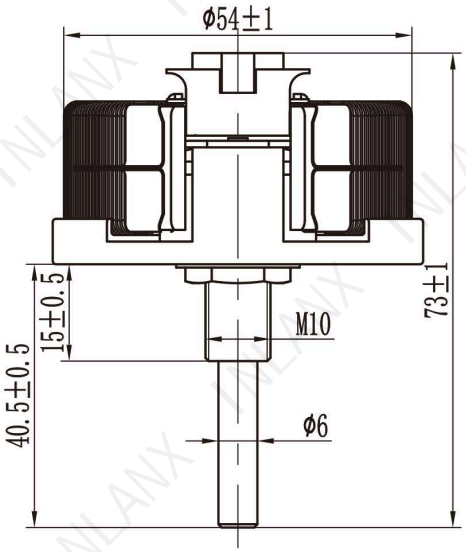

WX903

Wirewound Potentiometer

Electrical Characteristics

Parameter	Specification
Nominal resistance	15 Ω to 2 kΩ
Resistance tolerance	±10%
Dielectric withstand	1000 VAC at normal atmospheric pressure
Insulation resistance	≥1 GΩ (500 VDC)



Physical Characteristics

Parameter	Specification
Starting torque	10 to 100 mN·m
Marking	Trademark, model, nominal resistance, date code, resistance tolerance
End-stop torque	≤150 mN·m
Total mechanical travel	300°±10°

Circuit Diagram

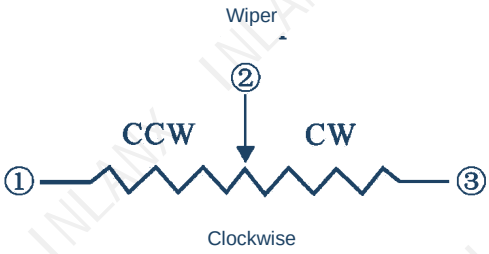

Nominal Resistance • Ω

Ω	Ω	Ω	Ω	Ω	Ω
15	39	100	270	680	1.8k
18	47	120	330	820	2k
22	56	150	390	1k	
27	68	180	470	1.2k	
33	82	220	560	1.5k	

Environmental Characteristics

Parameter	Specification
Rated power	12.5 W @ 85℃; 0 W @ 250℃
Temperature range	-55℃ to +250℃

Applicable Standards

Quality mark	Detail specification	Generic specification
Inverted triangle G mark	RU0.468.044JT; QZJ 84061	GB/T 15298-1994
J	RU0.468.044JT	GB/T 15298-1994

WX903

Wirewound Potentiometer

Main Inspection Items

Item	Test Conditions and Requirements
Temperature change	-55℃/250℃, 30 min, 3 cycles; insulation resistance ≥500 MΩ; ΔR≤±2%R.
Shock	25 g, 18 shocks; WX903-1: ΔR≤±3%R; WX903-2: ΔR≤±2%R. No mechanical damage.
Vibration	10 Hz to 500 Hz, 10 g, 30 min; WX903-1: ΔR≤±3%R; WX903-2: ΔR≤±2%R. No electrical discontinuity or mechanical damage.
Centrifugal acceleration	25 g, 5 min each, 3 times; WX903-1: ΔR≤±3%R; WX903-2: ΔR≤±2%R. No mechanical damage.
Bump	40 g, 4000 bumps, 6 ms, 40 to 80/min; WX903-1: ΔR≤±3%R; WX903-2: ΔR≤±2%R. No mechanical damage.
Mechanical endurance	12.5 W, 1000 revolutions; ΔR≤±5%R.
Damp heat, steady state	(40±2)℃, RH 90% to 95%, 48 h; ΔR≤±2%R; insulation resistance ≥200 MΩ; reliable electrical contact.

Outline Dimensions • mm

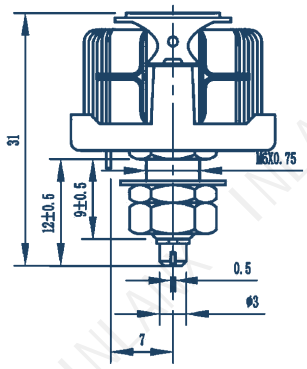

WX903-1 locking type

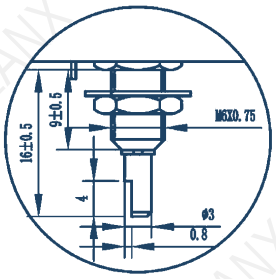

WX903-2 non-locking

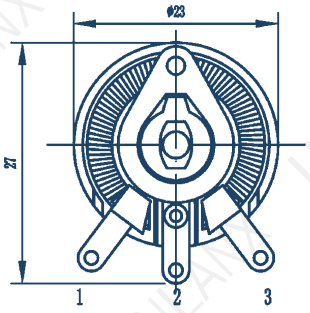

Unspecified tolerances: GB/T 1804-m

Ordering Information

WX903-1 - 150R - K

Model WX903-1 (locking) or WX903-2 (non-locking) / Nominal resistance / Tolerance K (±10%)